Installation, lubrication and maintenance manual

Cylindrical Plug valves

Product group 1.

Immediately before the pressure test, the valve must be re-lubricated. After the pressure test, the valve must be lubricated again whilst in the open position. If possible the valve should remain in the open position until it is put into service.

ISO 9001 CERTIFIED

BRDR. CHRISTENSENS HANER A/S

Skuderløse – 4690 Haslev – Denmark.

Phone +45 56 36 36 36 – Fax +45 56 36 36 00

www.bch.dk – bch@bch.dk

Design

The BC lubricated plug valve group 1 is the ideal shut-off device for almost any medium, even under the most severe operating conditions.

It can be used in most places where fast, trouble-free and efficient sealing is required. The design is very compact, it requires little space to install and it can be mounted in any position required.

The basic operation of the BC valve is very simple, as the only moving part is the plug. In open plug position, the passage area is free and in line with the pipeline. On turning the plug 90° to closed valve position, the passage is shut off, thus providing efficient closure.

The BC valve is furnished with a lubrication system which allows feeding special lubricant into the valve.

On lubrication, the grease is forced into a groove system where from it is distributed between the seating faces of the valve body and those of the plug, forming a sealing and corrosion preventive lubricating film. The plug is therefore surrounded by grease on all surfaces, which besides the two advantages already mentioned, provides for smooth-acting control even after long periods of service interruption.

The big advantage of the BC lubricated valve is that a positive seal can be obtained easily without disturbing the operation, just by lubricating the valve.

The BC group 1 valve is cylindrical and fits into the body with close tolerance. The cylindrical shape allows the plug to move freely up and down in axial direction, and still retain the same tolerance between body and plug.

At the top of the plug, the valve is provided with an O-ring seal, while at the bottom it is closed by the bottom cover.

The BC valve can be operated manually or by an electrical, pneumatic or hydraulic actuator.

The valves can be supplied as wrench operated or gear operated valves. Smaller sizes are usually wrench operated.

On wrench operated valves, the body is provided with a stop which in connection with a stop on the stem limits the rotation of the plug.

On gear operated valves, the top has a machined face where the gearbox is fitted. The rotation stop is located inside the gearbox.

Moreover the valves can be delivered with a top flange for mounting any kind of actuator. If the valve is supplied with such a top flange, the lubrication point is located on the side of the valve body instead of the on the top of the stem.

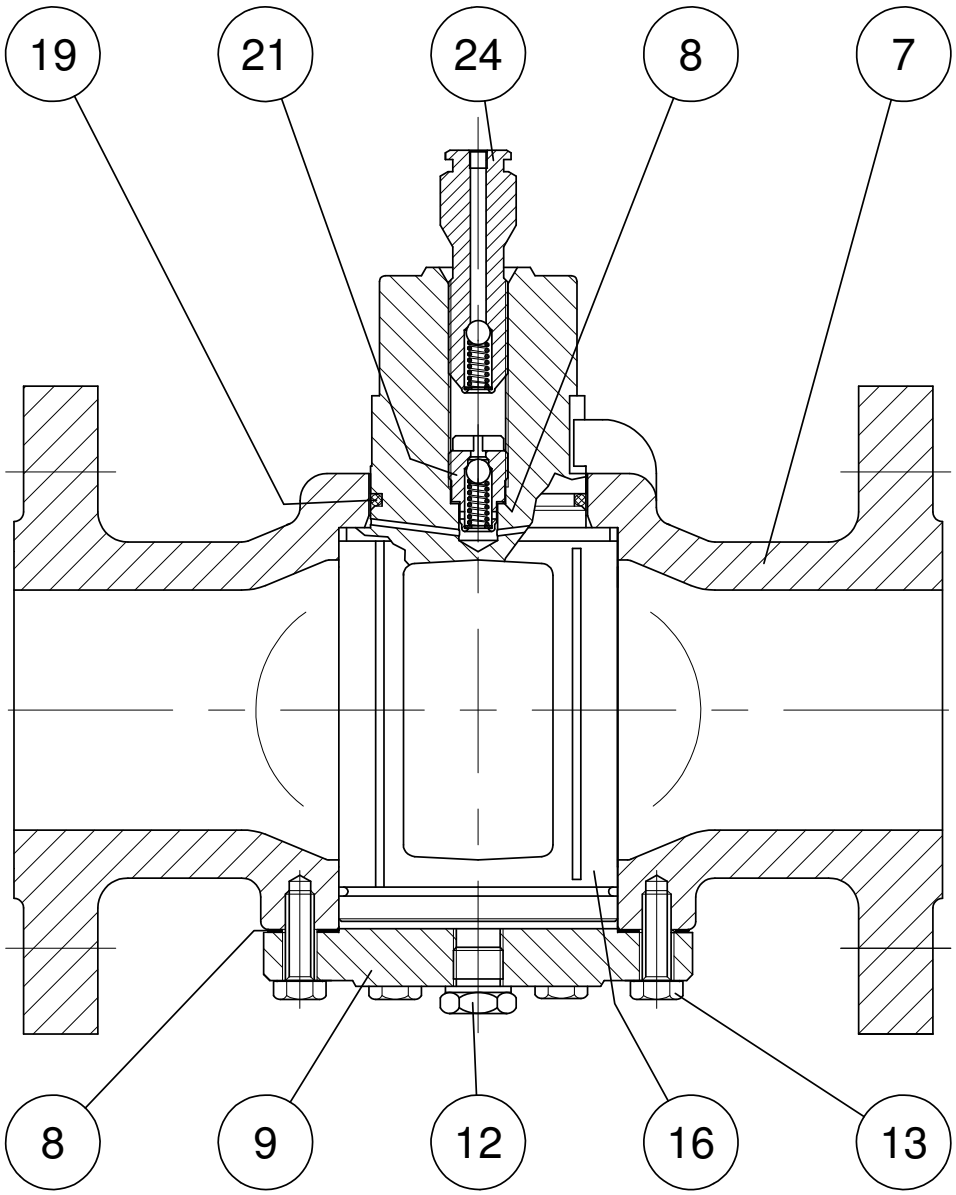

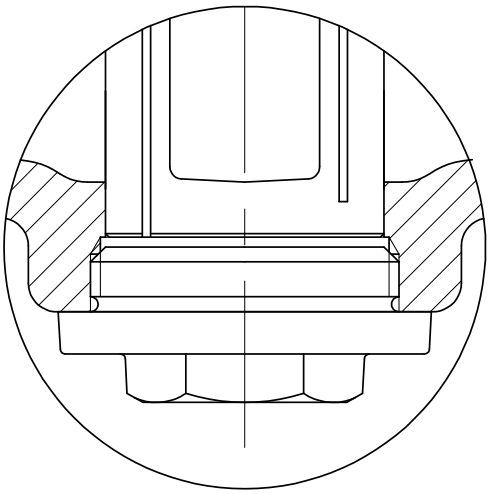

Bottom design
of smaller valves

7 Body
8 Gasket
9 Cover
12 Bottom screw
13 Bolt
16 Plug
19 Sealing ring
21 Check valve
24 Lubricant screw

The valve is grease packed, i.e. the plug rests on a lubricating film in the valve body.

The lubricant has three functions: to protect the internal closing surfaces of the valve from corrosion, to seal the valve, and to contribute to low operating torque. With an eye to achieving the best possible action, it is therefore important to re-lubricate the valve.

The BCH valves type 1 can be lubricated by use of either special lubricant sticks or a lubrication gun, which is the recommended method.

Refer to page 7 for information of how to choose the right lubricant for your valves.

Interval between re-lubrications
The interval and quantity of lubricant for re-lubrication depends on the working conditions, in particular the temperature, the operating frequency, the medium, and the need for tightness. A high working temperature dries up the lubricant.

In cases where the medium is non aggressive and the temperature is low, the need for re-lubrication will be small. It is a matter of experience, but as a guideline and starting point, the values in the table below can be used.

Working temperature	0°C - 90°C	90°C - 120°C	120°C – 150°C	150°C - 180°C	180°C - 200°C
	32°F - 200°F	200°F - 250°F	250°F – 300°F	300°F - 350°F	350°F - 400°F
Interval	24 months	12-18 months	8-12 months	4-8 months	2-4 months

- **General instructions**
  The valve must be in fully open position when it is re-lubricated. Where the medium is compressible (e.g. air or gas) re-lubrication can also take place in the fully closed position.
- *When lubricating a valve, a noticeable increase in lubricating pressure indicates that the valve is now properly lubricated. If this point is not reached at the expected time, there might be a leakage of lubricant into the pipeline. Consult your dealer.*
- *Do not use a lubrication pressure that is too high.*

Re-lubrication with lubricant sticks
Lubricating can also be effected by lowering the lubricating screw into the lubricant chamber. In doing so, the lubricant under screw is pressed into the lubricating channels in the valve.

Refilling the lubricant chamber is done by unscrewing the lubricating screw, inserting a new lubricant cartridge and then screw the lubricating screw back in.

The lubricant sticks are mainly used to lubricate a small number of valves and valves of small dimensions.

Different sticks are available, depending of the size of the lubricating screw.

Size of lubricant screw	Stick size	Packing size	Valve size (guide line)
M8	No. 6	20 pcs.	DN 15-20mm / DN ½” – 1”
M12	No. 10	14 pcs.	DN 32mm / DN 1¼”
M15	No. 13	10 pcs.	DN 40-65mm / DN 1½” –2½”
M20	No. 18	7 pcs.	DN 80-175 / DN 5”-7”

Lubrication by gun

Lubrication is carried out with a BC-Lubricant gun (manually with type BC-1 or pneumatic with type BC-2, see page 7). These guns works in a pulsating manner, which improves the distribution of the lubricant in the lubricating channels. Do not use other types of guns.

The tube of the lubricant gun has a “push-on-head” for direct connection to the valve lubricating nipple or lubricant screw.

Do not lubricate too fast - the lubrication must be allowed to distribute itself.

Do not lubricate with a higher pressure than stated in the table below.

If possible, make a few minor movements of the plug to further the distribution of the lubricant on the sealing surfaces.

On valves with more than one lubricant point, one half of the lubricant is distributed at the valve top while the other half is distributed at the valve bottom.

Amount of lubricant for each valve size

Valve size (body)		Vol. lubri-cant	Number of strokes		Indica-tor units	Valve size (body)		Vol. lubri-cant	Number of strokes		Indica-tor units
Inch	mm	cm^3	BC-1	BC-2	BC-2	Inch	mm	cm^3	BC-1	BC-2	BC-2
½”	15	1,3	1			9”	225	50	28	50	0,50
¾”	20	1,5	1			10”	250	61	34	61	0,61
1”	25	1,8	1			11”	275	68	38	68	0,68
1 ¼”	32	2,5	2			12”	300	79	44	79	0,79
1 ½”	40	4	2			14”	350	97	54	97	0,97
2”	50	5	3			16”	400	112	62	112	1,12
2 ½”	65	7	4			18”	450	137	76	137	1,37
3”	80	9	5			20”	500	148	82	148	1,48
4”	100	13	7	13	0,13	24”	600	189	105	189	1,89
5”	125	22	12	22	0,22	28”	700	227	126	227	2,27
6”	150	27	15	27	0,27	30”	800	263	146	263	2,63
7”	175	32	18	32	0,32	36”	900	302	168	302	3,02
8”	200	40	22	40	0,40	40”	1000	342	190	342	3,42

The BC-1 gun gives approx. 1.8 cm^3 per stroke, the BC-2 approx. 1 cm^3

Max. allowable lubricating pressure for the BC-2 gun.

Valve body material	**Class designated valves**	**PN Designated valves**
Steel	Valve pressure in psi + 3990 psi	Valve pressure in bar + 275 bar
Ductile Iron	Valve pressure in psi + 3260 psi	Valve pressure in bar + 225 bar
Grey cast iron	Valve pressure in psi + 2175 psi	Valve pressure in bar + 150 bar

Note : For safety reasons the lubrication pressure stated must not be exceeded. Particular caution must be displayed when lubricating cast iron plug valves.

Re-lubrication of gear

The lubrication of the gear follows the principle of dry lubrication, meaning that a layer of antiseizing paste with a content of molybdenum disulphide is applied to bearings, teeth and worms. Bearings are lubricated through lubricating nipples.

The gear is lubricated at the factory and needs no lubrication within the first year of valve action.

The gear bearings are lubricated through grease nipples. Shown below is the arrangement of the grease nipples on the two BC gear types. The toothed quadrant, wheels and worms are, as a rule, never re-lubricated. However, in case of operation difficulties where a “screaming” noise occur, lack of lubrication is normally the problem.

For gear type C and D, a removal of the gear covers is necessary to make the gear parts accessible. The lubrication paste is then applied to all tooth-rims of both worms and worm wheels in a layer of about 1 mm.

Recommended lubricant for bearings, worms and gears: BCH G10. Concentrated powdered molybdenum disulphide cannot be recommended, as the layer thickness here is too small.

Gear type C and D are supplied with two threaded drain plugs - one on the top an one in the bottom. One of these plugs has a pressure relief valve.

Please notice: This plug must always be placed in the correct hole, depending on the type of lubrication and installation position. If the gear is lubricated as described above, the pressure relief plug shall be placed in the lower hole. If the gear is filled with soft grease, the plug is placed in the upper hole. See page 6 for information of lubricant gun.

Gear Type D
(Vertical operating stem)

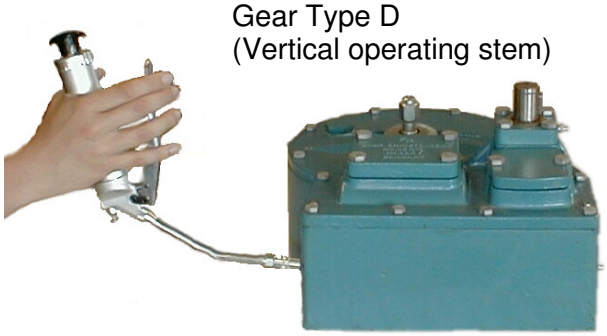

Lubrication of bearings

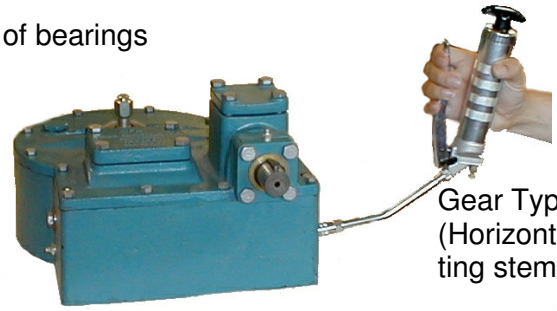

Gear Type C
(Horizontal operating stem)

Lubrication of worm
and worm gear

If required, the worm gears can be delivered with soft grease.

The gearbox will be filled with sufficient grease approximately 70% of the gearbox-volume.

Grease type: Castrol Grippa 355

Important notice: Overpressure protection.
In case of any third party mounting an actuator/gear/stem extension on a valve without our standard gearbox, means shall be provided of preventing pressure build-up in the assemblies. (Resulting from a stem seal leakage.)

Manual lubricant gun type BC-1
for valve lubrication.

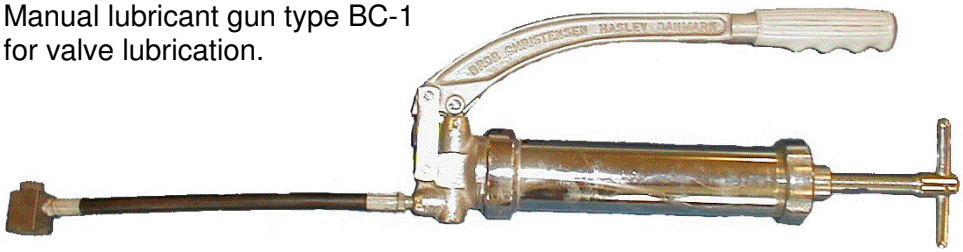

Cartridge for lubricant
gun type BC-1

The lubricant gun type BC-1 is manual operated, which means that the lubricant is pressed into the valve by a high pressure piston pump, when the arm is moved. By turning the handle at the rear end of the gun, the lubricant is pressed forwards against the piston pump. The handle is turned approximately 1/2 turn for each two/three strokes.

The lubricant for BC-1 is delivered in 300 cm^3 cartridges.

Pneumatic Lubricant Gun type BC-2 – 330
Input air pressure: Max. 8 bar (115 Psi).
Output pressure at 8 bar (115 Psi):
330 bar (4785 Psi).

Pneumatic Lubricant Gun type BC-2 – 1000
Input air pressure: Max. 8 bar (115 Psi).
Output pressure at 8 bar (115 Psi):
1000 bar (14500 Psi).

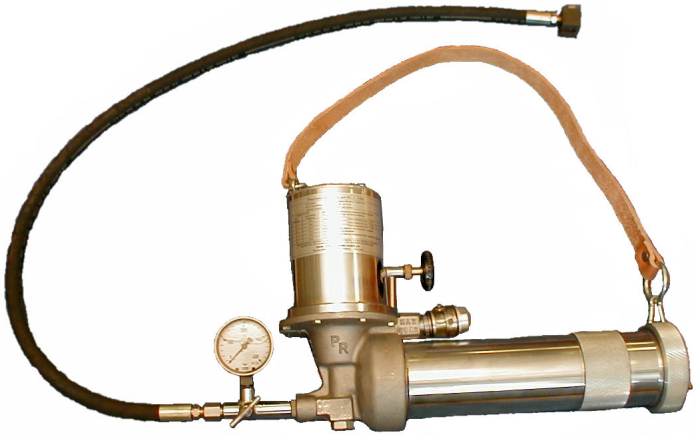

The lubricant gun type BC-2 is pneumatic, and it requires a pneumatic pressure between 5 and 8 bar (to work properly. The speed of the strokes is adjusted by a handle at the gun.

The gun is provided with a manometer, and the output lubricating pressure depends on the working pressure of the valve. For steel valves the lubricating pressure is approximately 275 bar above the working pressure. The accurate lubricating pressure can also be seen from a table, placed on the gun.

The lubrication gun is provided with an oil reservoir, which has to be refilled when it is empty.

The lubricant for BC-2 is delivered in 1250 cm^3 cartridges.

The pneumatic lubricating gun is recommended
when a larger number of valves have to be lubricated.

Gun type 315 – 2
For gear lubrication

Grease for gear:
type BCH G10 in a 1 kg can.

Valve lubricants

There are different BC lubricants for different flow media. It is therefore important to relubricate the valve with the proper type. If the valve is ordered precisely for the medium for which it is fitted, then the type of lubricant is stamped on the hexagonal head of the lubricating screw. Use only original BC lubricant.

Standard Lubricants - mainly to be used.

Lubricant no.	Colour	Temperature range ℃	Temperature range ℉	Recommendations
BC 80	Black	- 10 +180	+14 +356	- Water up to 180℃ (356℉) conditional up to 200℃ - Cold and hot air. - 50% lye up to 50℃ (122℉) conditional up to 100℃, - 50% acids up to 50℃ (122℉) - Inorganic saline solutions up to 100℃ (212℉) - Steam conditional up to 200℃ (392℉) - Suitable for town gas, propane, butane and natural gas. - Not suitable for gas condensate.
BC 711	Black	- 10 +225	+14 +437	- Petroleum products. Butane and propane (max. 100℃) Gasoline, kerosene, asphalt and bitumen, oils and most hydrocarbon solvents. - Also suitable for gases (max. 170℃ / 338℉) - Cold and hot air. - Not suitable for hot water, strong alkalis and aromatic solvents.

Special Lubricants

Normally to be used only where the standard lubricants cannot be used. For exceptional working conditions and services not mentioned in the table, please ask for further information.

Lubricant no.	Colour	Temperature range ℃	Temperature range ℉	Recommendations
BC 40	Clear	- 10 +100	+14 +212	- Cold and warm water. - General Aqueous Solutions. - Alcohols.
BC 45	Yellowish beige clear	- 10 +130	+14 +266	- For water at max. 100℃ (212℉) - Drinking-water, beer, mineral water, milk, cocoa, cream - Ammonia compound, acids and alkali desinfecant, fruit-acid and alcohol.
BC 60	White	- 30 +250	- 22 +482	- All diluted and concentrated acids and lyes, fluorine, chlorine, bromine, iodine, phosphorus oxychloride, ozone, hydrogen peroxide, - All organic solvents (except hydrogen fluorcide) - All mineral, vegetable and animal oils and fats. - Does not affect elastomers and plastics.
BC 103	Green	-30 +200	-22 +392	- General purpose synthetic sealant for liquid and gaseous aliphatic hydrocarbon service - Suitable for gasoline, kerosene, fuel oils, crude distillates, aviation and jet fuel, natural gas. - Not suitable for steam, aromatic solvents, strong acids and alkalies.
BC 280	Black	- 10 +200	+14 +392	- Air up to 200℃ (392℉) - Water up to 180℃ (356℉) - Gases up to 150℃ (302°) - Not suitable for strong acids, petroleum products and aromatic and chlorinated solvents.

Table for PS, (max. pressure) for standard class designated valves.

at TS = -20°F / -29°C, (min. temp.)

Pressure / temperature rating in acc. to ASME B16.34.

Material (cast steel)	Rating Class			
	150		300	
	Psi.	Bar	Psi.	Bar
ASTM A216 Gr.WCB	285	19.7	740	51.0
ASTM A352 Gr.LCC ASTM A352 Gr.LC2 ASTM A216 Gr.WCC	290	20.0	750	51.7
ASTM A352 Gr.LCB	265	18.3	695	47.9
ASTM A351 Gr.CF3M ASTM A351 Gr.CF8M	275	19.0	720	49.6
ASTM A890 Gr.4A* ASTM A890 Gr.5A* ASTM A352 Gr.CA6NM*	290	20.0	750	51.7

*not included in ASME B 16.34

Table for PS, (max. pressure) for standard class designated valves.

at TS = 20°F / -29°C, (min. temp.)

Standard class designated valves.

Pressure / temperature rating in acc. to ASME B16.1.

Material (Cast iron)	Rating Class							
	125				250			
	DN ½ ” - 12”		14” - 36"		DN ½” - 12”		14” - 36”	
	Psi.	Bar	Psi.	Bar	Psi.	Bar	Psi.	Bar
ASTM A 126 Class B	200	13.8	150	10,3	500	34,5	300	20,7

Table for PS, (max. pressure) for standard PN (Pressure Nominel) designated valves.

at TS = -20°F / -29°C, (min. temp.) for steel valves,
and TS = 14°F / -10°C for cast iron valves.

Pressure / temperature rating in acc. to DIN 2401 Part 2.

Material	Rating PN									
	6		10		16		10		40	
	Psi.	Bar	Psi.	Bar	Psi.	Bar	Psi.	Bar	Psi.	Bar
Cast Iron (All types)	87	6	145	10	232	16	363	25		
Steel (All types)			145	10	232	16	363	25	580	40

The limits for max. / min. temperatures and pressures are stated with reservation for other limits determined by national legislation and other valve standards.

The limits for the max. / min. temperatures do not cover all types of lubricants and sealing rings.

Procedure for installation of cylindrical plug valves

1. Place the plug in the ”Open” position before the installation.
2. The valve can be installed in any position required. (Horizontal, vertical etc.).
3. Before mounting the valve in the pipe system, be sure there are no trapped materials in the passage way of the valve. Remove any such trapped materials.
4. Avoid exposing the valve to pipe tensions. The pipe arrangement has to be designed in such a way that pipe tensions are minimised.
5. The lubricating points of the valve should be easily accessible.
6. There must be sufficient space for operating and repair of the valve; removal of bottom cover etc.
7. Avoid damage of the lubricant screw. If this occurs the screw should be replaced.
8. Large and heavy valves are lifted by using the special lifting lugs placed on the valve body. Smaller valves without lifting lugs are lifted with lifting straps wrapped around the valve body.

   Important notice:
   - If the valve is mounted with an actuator, do **not** lift the valve with straps attached to the actuator.
   - The main lift shall always be in the valve body.
   - Straps attached to the actuator shall be for the purpose of position control only. This shall also be observed when the valve is mounted with an extension.
   - If possible, always use soft straps that do not damage the valve coating.

9. Before the pressure testing:
   It is important to re-lubricate the valve before the pressure testing. The valve is fully lubricated from Brdr. Christensens Haner A/S, but experience shows, that even after a careful lubrication a small amount of air may be left in the lubricating system.

   During time, if the valve is not serviced, this air might expand to small air pockets. This can cause leaks. Therefore, as a rule, the valve should be re-lubricated before the pressure testing.

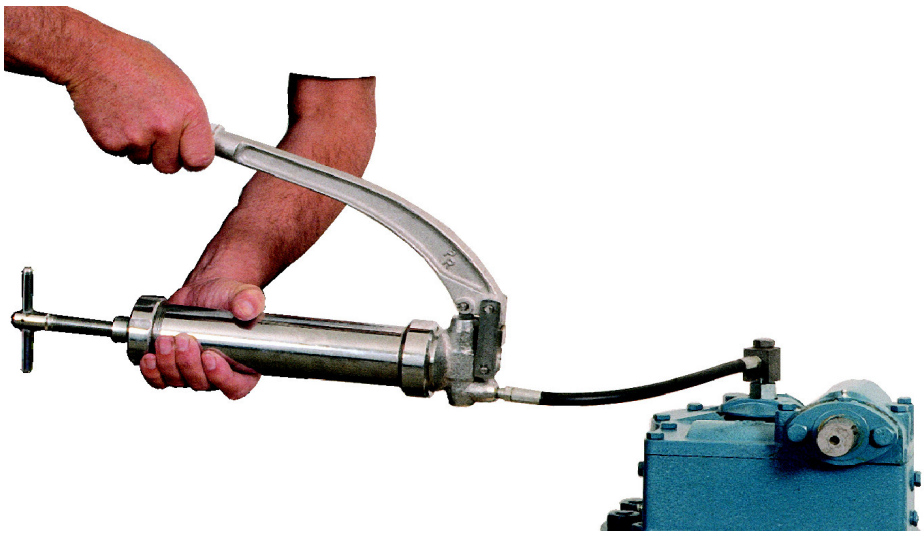

Nameplate from the BC-2 gun

Pneumatic lubricating gun BC 2		
Air Supply : Adjustable between 3 and 8 bar Air Consumption : 60 l/min. at 6 bar Lubricant Supply : 1,3 cm^3 per stroke		
Output in BAR		Max. allowable lubricating pressure in BAR (Kg/cm^2) for plug valves in the following materials :
Air Pressure	Lubricating Pressure	
3	120	Steel : Valve pressure in bar + 275
4	180	Ductile Iron : Valve pressure in bar + 225
5	240	Cast Iron : Valve pressure in bar + 150
6	300	**Note :** For safety reasons the lubrication stated pressure must not be exceeded. Particular caution must be displayed when lubricating cast iron plug valves.
7	360	
8	460	
The manufacturer assumes no responsibility, or liability, for any damage or accidents resulting from the operating of the BC 2 automatic lubricating gun. **BRDR. CHRISTENSENS HANER A/S** Skuderløse, DK – 4690 Haslev – Denmark		

Resume of important remarks:

Regarding lubrication

- Always re-lubricate before and after pressure testing.
- Re-lubricate the valve in open position.
- Use only BC lubricating guns and lubricants.
- Do not lubricate with a too high pressure.

Regarding installation

- Third party actuators, gears and stem extensions shall be provided with an overpressure valve.
- Avoid tension from the pipeline.
- Do not lift a valve in the actuator or the stem, use the lifting lugs on the valve.
- Always re-lubricate before and after pressure testing.

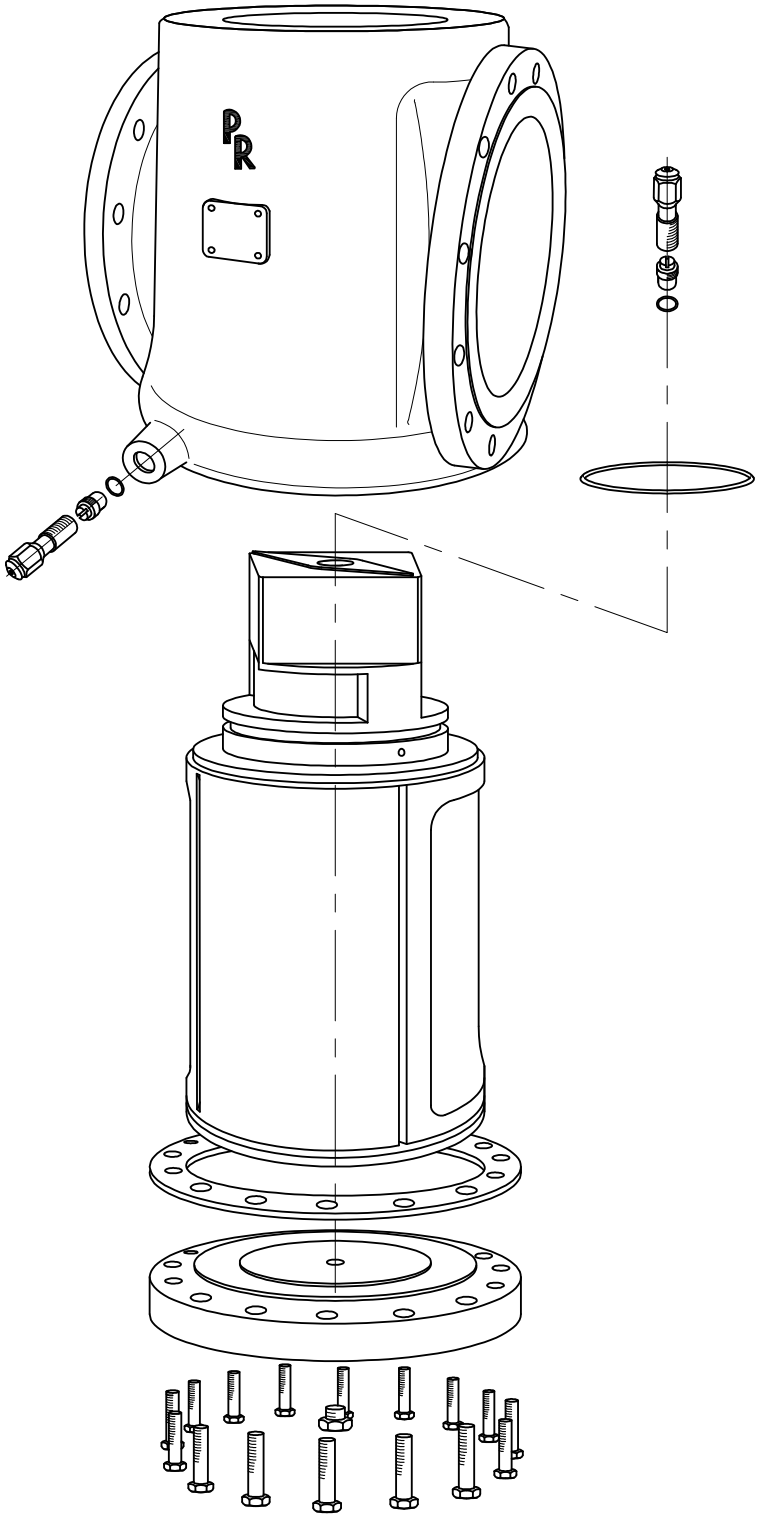

KÄHLER GmbH Armaturen
Industriestr. 77b, D-51399 Burscheid
Fon +49 (0)2174/7848-0 Fax -25
info@kaehler-armaturen.de | www.kaehler-armaturen.de